DATE: 5/14/2026
REV: A.1

Cayuga DISPLAYS

# INSTALLATION, OPERATIONS, AND SERVICE MANUAL -MRO & FGD

# Table of Contents


**General Information** **3**

**Receiving & Shipping Damage or Lost Items** **3**

Concealed Damages ....3

Lost Items ....3

**General Assembly - MRO & FGD** **4**

**Case Data** **4**

Electrical Data ....4

Refrigeration Data ....4

**Installation** **5**

Receiving ....5

Power Supply ....5

Installation Site ....5

Exterior Panel Removal & Installation ....5

Installation Checklist ....5

**Operation** **6**

Loading ....6

Cleaning ....7

Recommended Cleaning Procedure ....7

**Maintenance** **9**

**Troubleshooting** **10**

**Parts List** **11**

**Wiring Diagram** **12**

Wiring Diagram - 115V Units ....12

Wiring Diagram - 230V Units ....13

**Warranty** **14**

Conditions of Warranty ....14

Exclusions from Warranty ....14

Liability Restrictions of Cayuga Displays Inc. ....15

Disclaimer ....15

# General Information

This manual has been prepared for owners, licensed technicians, and installers to help install, operate, and service showcase models MRO & FGD.

| Legend | | |
|---|---|---|
| | | |
| Caution | Note | Warning |

## Caution:

**This showcase is not intended for use by persons (including children) with reduced physical, sensory, or mental capabilities, or lack of experience and knowledge, unless they are supervised by the person responsible for their safety. Children should be supervised to ensure they do not play with the showcase.**

## Warning:

**These showcases are designed for the display of products in a conditioned space maintained at a maximum of 75F and 55%RH and should be installed and operated according to the instructions in this manual. Failure to meet these requirements can result in operational issues such as warm product, product degradation and spoilage, excessive ice buildup, and increased refrigeration load.**

# Receiving & Shipping Damage or Lost Items

All equipment should be carefully inspected for shipping damage prior to and during unloading of the equipment. If there is any damage the carrier should be notified immediately, and an inspection performed upon request. Any evidence of damage should be photographed, and the damage must be noted on the delivery slip.

## Concealed Damages

If damage of a concealed nature is discovered the carrier must be immediately contacted, no later than three days following the delivery. At that point a claim must be filed by the consignee for all damages. Document and photograph all damage as evidence when filing a claim.

## Lost Items

All claims for shortages must be placed within 10 days after receipt of shipment.

# GENERAL ASSEMBLY

## MRO & FGD

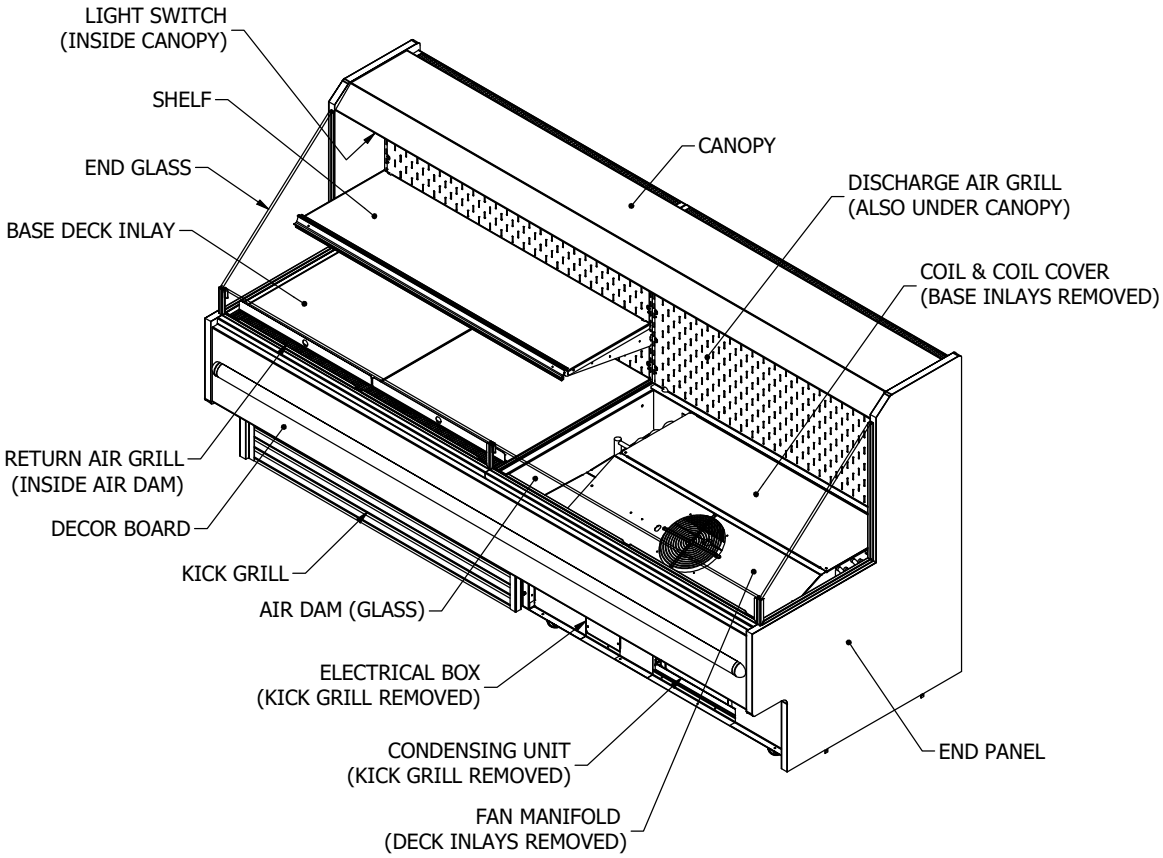


# Case Data

Electrical Data

| Model | Input | Load | Plug |
|---|---|---|---|
| MRO-38-##-SC<br>FGD-38-##-SC | 115V/1/60Hz | 8.0A | NEMA 5-15P |
| MRO-48-##-SC<br>FGD-48-##-SC | 115V/1/60Hz | 8.0A | NEMA 5-15P |
| MRO-76-##-SC<br>FGD-76-##-SC | 230V/1/60Hz | 8.0A | NEMA L14-20P |
| MRO-96-##-SC<br>FGD-96-##-SC | 230V/1/60Hz | 8.0A | NEMA L14-20P |

Refrigeration Data

| Model | Discharge Velocity | Discharge Temp | Setpoint | Differential | Defrost Interval | Defrost Duration |
|---|---|---|---|---|---|---|
| | fpm | F | F | F | Hours | Min |
| MRO-38-##-SC<br>FGD-38-##-SC | 275 | 25 | 20 | 10 | 6 | 30 |
| MRO-48-##-SC<br>FGD-48-##-SC | 275 | 25 | 20 | 10 | 6 | 30 |
| MRO-76-##-SC<br>FGD-76-##-SC | 275 | 25 | 20 | 10 | 6 | 30 |
| MRO-96-##-SC<br>FGD-96-##-SC | 275 | 25 | 20 | 10 | 6 | 30 |

# Installation

MRO & FGD type showcases are self-contained showcases and can be installed very quickly and easily.

## Receiving

Carefully inspect all equipment before and after removing packaging materials for any shipping damage. See 'Receiving & Shipping Damage or Lost Items' for additional information.

## Power Supply

Confirm that appropriate electrical connection is available at the installation location (See 'Showcase Data' chart for electrical information). All connections must comply with NEC and local codes. Review codes to determine if a means of disconnection is required for installation of this equipment with a cord and plug. Always ensure to disconnect all power sources to the showcase before opening any electrical access panels.

## Installation Site

Once all packaging material is removed position the showcase in the desired area. Ensure the installation area is a minimum of 15 feet from any exterior exits and ventilation outlets as this will affect the performance of the showcase.

Plug the showcase into the appropriate receptacle and it will begin operating after a brief delay. Verify that the showcase is operating by using the Installation Checklist. Allow the showcase to run for 1 hour after start-up before loading with product.

## Exterior Panel Removal & Installation

FGD showcases are shipped with all exterior decorative panels installed, but they may be easily removed to access the condenser & compressor compartments for cleaning and service. To remove a panel, grip it by the bottom edge and firmly pull it away from the showcase. Four C-shaped clips located around the perimeter of the panel will release with that motion, and the panel can be completely detached from the showcase and set aside in a safe location. To re-install the panel align the C-shaped clips on the panel with the round buttons on the showcase and strike the face of the panel firmly near each of the C-shaped clip locations with the heel of your hand. The C-shaped clips should snap onto the round buttons and hold the panel securely in place.

## Installation Checklist

- ☐ Showcase is correctly located in an area away from exterior exits and ventilation
- ☐ Showcase is plugged into appropriate receptacle
- ☐ Evaporator fan is turning
- ☐ Lights are all illuminated
- ☐ Hot air is being discharged from rear of showcase
- ☐ All air ducts, covers, and product display decks are installed
- ☐ Cold air is being discharged from the discharge air grills
- ☐ All exterior decorative panels are properly snapped into location
- ☐ Allow showcase to run for 1 hour after start-up before loading with product

# Operation

## Warning:

**Always ensure that product being loaded into the showcase is at or below the desired holding temperature. Cayuga Displays showcases are not designed to chill product but rather keep product at safe temperatures. Operators are required to monitor product temperature during use to ensure that the food is being held at safe temperatures.**

## Warning:

**This showcase is designed to hold product between 36-41F (2-5C) within controlled and maintained ambient conditions not exceeding 75F (24C) and 55% relative humidity. Operating outside of these conditions will negatively impact the ability of the showcase to maintain food safe temperatures.**

## Note:

**A properly stocked showcase will operate and maintain temperature more consistently than an empty showcase.**

## Loading

Do not load product into the showcase until it has been verified to be operating at the correct temperature as per factory specs.

Improper stocking of your showcase can negatively affect the cooling performance of your showcase. At no time should the showcase be stocked beyond the load line, over the edge of shelving, or with product blocking any ventilation areas.

Only load the showcase with already chilled product. Loading warm product into the showcase can cause temperature and humidity issues in the operation of the showcase and can result in warm product and spoilage.

This showcase is not designed to chill the product, but to maintain a set chilled temperature.

Be aware of how high product is stacked while stocking the showcase. Stacking of product can result in the center layers of product being insulated from the refrigeration and becoming warm. Product should be stacked a maximum of two layers high.

## Caution:

**Always be aware of food handling procedures while loading the showcase. Allowing product to sit unrefrigerated for extended periods of time while loading the showcase can result in unintentionally allowing the product to reach unsafe temperatures and cause spoilage. Take steps to minimize the amount of time from when a product is removed from cold storage to when it is placed in the showcase for best results.**

## Caution:

**Liners and trays may be used in the display area, but ensure that any liners or trays used do not block any ventilation areas. Blocking of any ventilation areas will result poor showcase performance and warm product temperatures and/or defrosting issues. Ensure that the openings around the exterior bottom of the showcase are not blocked by other displays or boxes. Blocking these ventilation openings will negatively impact the performance of the showcase.**

## Cleaning

### Caution:

**Do not use any cleaner aside from a mild soap and water solution to clean any acrylic or painted surface. Any use of solvents or cleaners including Windex may damage the acrylic or paint, both immediately and over an extended period of time and will not be covered under warranty.**

### Caution:

**Do not use anything aside from a soft cloth to wipe any acrylic or painted surfaces. The use of paper towels, rough cloths, or any scouring materials will result in scratched acrylic and painted surfaces and will not be covered under warranty.**

Showcases should be cleaned as part of a regular sanitation and maintenance schedule. Frequency of cleaning varies based on the use of the showcase and should be determined by the user. Emptying and thoroughly cleaning the showcase should be done at least once a week.

Interior surfaces should only be cleaned using warm water with mild soap and a sanitizer. Do not use steam cleaners, extremely hot water, or high pressure water streams to clean the showcase. Doing so will damage the interior seals and cause drain pan leaks, and may break glass surfaces. Do not pour water into the showcase, as the drainage system is only designed to handle the condensate collected by the refrigeration system.

Exterior surfaces should be cleaned with a warm water and mild soap solution.

Do not use ammonia based cleaners or any cleaners containing abrasive materials as they will damage the surface finish of the showcase.

Do not hose down or submerge the shelving in water as it may damage the LED light strips.

Never use warm or hot water on cold glass surfaces as it may cause the glass to shatter. Allow glass to warm up to room temperature before cleaning.

## Recommended Cleaning Procedure

1. Remove all product from the display area and store appropriately in a refrigerated space until cleaning is completed.
2. Turn off the showcase by unplugging the cord from the receptacle.
3. If equipped with shelves wipe down shelves in place with a damp cloth. If required shelves can be removed by disconnecting the light strip and lifting the shelf from the shelf brackets. Shelf brackets can also be removed by lifting them out of the pilaster strip. When reinstalling shelf be sure to place it in the correct position, so that the shelf sits level left-to-right, does not block airflow, and that all components are fully and correctly seated in position before any product is loaded.
4. Base deck inlays can be lifted out of position and wiped with a damp cloth. The rear airduct can be wiped down in location. With the base deck inlays removed the evaporator coil, fans, and refrigeration components are exposed for cleaning. Do not drop heavy items or use sharp objects in this area, doing so will cause damage to the showcase and the refrigeration system. This area can be wiped out with water and cleaned with a brush as needed. Ice buildup may be seen on the evaporator coil, never remove this using sharp objects or sources of heat. Allow ice to naturally melt. When

completed ensure the base deck inlays are installed in the correct position.

5. The evaporator coil can be accessed for cleaning. Unplug the fan cord and remove the fasteners located on the ends of the fan mount and coil cover. The fan mount and coil cover can then be lifted out of position and wiped down with a damp cloth. The drain and evaporator are now exposed and can be inspected and cleaned – being careful not to damage or bend evaporator fins while cleaning. The fan mount and coil cover can be reinstalled in the reverse procedure to the removal. Ensure the fan cord is plugged in before covering up the area again with base deck inlays.

6. Exterior surfaces can be wiped with a damp cloth.

7. To inspect and clean the condenser the front louvered kickboard can be removed without tools. Simply grasp the kickboard and lift upwards to release it from the pins holding it in place. The condenser fins can be cleaned with a soft bristle brush, vacuumed clean, or blown clean with compressed air – being careful not to damage or bend condenser fins while cleaning. To replace the kickboard after cleaning align the keyhole slots in the back of the kickboard with the mounting pins and allow gravity to hold it in place.

8. Ensure that any plugs disconnected during cleaning are reconnected and the showcase can be plugged in and turned on again. Verify that all systems are operating correctly and allow the showcase to cool down again to operating temperature before loading with product again.

## Caution:

**Always turn off power during the cleaning process as cleaning the showcase while electrical power is supplied is a shock hazard that may cause serious injury or death. Never dump or pour water directly onto any wiring or electrical connections. Ensure all electrical connections are dry before re-energizing the showcase.**

## Warning:

**Do not use hot water to clean the cold glass surfaces as this could lead to the glass shattering and could result in personal injury. Glass should be allowed to warm before cleaning.**

## Note:

**After cleaning ensure that all fans and lights are reconnected before restarting the showcase.**

# Maintenance

This showcase requires regular maintenance to continue functioning correctly and efficiently. The frequency this maintenance is required can vary greatly depending upon the store conditions and the product displayed, but it is better to remain on the side of caution and carry out frequent maintenance than delay maintenance and risk losing product, voiding warranty, or damaging your showcase.

| Maintenance Action | Recommended Frequency |
|---|---|
| Quick clean of display area | 1-3 days |
| Deep clean of display area | 1-2 weeks |
| Clean exterior of showcase | 1-2 weeks |
| Check showcase temperature | Minimum every day |
| Clean condenser filter | 1-2 weeks |
| Clean evaporator coil | 1-2 months |
| Clean condenser coil | 1-2 months |

Warning

## Warning:

**Failure to clean evaporator and condenser coils resulting in damage to the refrigeration system will void the showcase warranty. Cleaning of evaporator and condenser coils is best carried out by a trained professional to prevent damage to the fin surfaces.**

# Troubleshooting

| | | |
|---|---|---|
| Warm Product | Showcase loaded with warm product | Ensure product is properly pre-chilled before loading |
| | Showcase not cooled down | Allow to fully cool down at initial start-up or after cleaning before loading with product |
| | Nearby doorways or ventilation blowing into showcase | Re-evaluate showcase location |
| | Ambient temperature/humidity too high | Adjust HVAC system |
| | Improperly loaded product | Ensure return air vents are not blocked and product is within load lines |
| | Condenser airflow blocked | Move any object blocking airflow at bottom of showcase |
| | Condenser dirty/dusty | Clean condenser |
| | Evaporator coil frozen | Turn off showcase for manual defrost |
| | Setpoint changed | Adjust setpoint as needed, a few degrees per adjustment |
| | Evaporator fan not plugged in after cleaning | Plug evaporator fan back in |
| | Covers not properly reinstalled after cleaning | Ensure coil covers, fan mounts, and base deck inlays are properly installed |
| Showcase blowing warm air | System in defrost | Allow 15 minutes to complete defrost, then re-assess |
| Frozen evaporator coil | Blocked return air grill | Ensure product is not blocking return air grill |
| | Evaporator fan not plugged in after cleaning | Plug evaporator fan back in |
| | Ambient humidity too high | Adjust HVAC system |
| Frozen product | Setpoint changed | Adjust setpoint as needed, a few degrees per adjustment |
| Noisy showcase | Condenser dirty/dusty | Clean condenser |
| | Loose panel/part | Check all parts properly secured and panels retained properly by c-clips |
| Water on floor | Ambient humidity too high | Adjust HVAC system |
| | Drain hose fallen out of place | Replace drain hose in drain pan |
| Condensation | Ambient humidity too high | Adjust HVAC system |
| Lights not illuminating | Light switch turned off | Check light switch |
| | Power connection has come loose | Check all light strips are properly plugged in |

# Parts List

| Component | Manufacturer | MRO-38-## | MRO-48-## | MRO-76-## | MRO-96-## |
|---|---|---|---|---|---|
| | | FGD-38-## | FGD-48-## | FGD-76-## | FGD-96-## |
| Evaporator | | Contact Factory | | | |
| Condensing Unit | | Contact Factory | | | |
| TXV | Sporlan | EVR-1/3-C | EVR-1/3-C | EVR-1/3-C | EVR-1/3-C |
| Evaporator Fan | AoFrio/ Wellington | ECF2-8A0541 | | | |
| Digital Controller | Carel | PZUAC0E520 | | | |
| Contactor | American Zettler | AZ2800-2A-120AE | | | |
| Fuse | | N/A | | 15A Class CC | |
| Thermometer | Miljoco | CD104684-60B | | | |
| LED Driver | Keystone | KTLD-60-UV-12V | | | |
| LED Strip, 3500K | Zortech | FLS-02-SC-F25S180-12-3500-C-BL6-35 | FLS-02-SC-F25S180-12-3500-C-BL6-45 | FLS-02-SC-F25S180-12-3500-C-BL6-35 | FLS-02-SC-F25S180-12-3500-C-BL6-45 |
| LED Strip, 4100K | | FLS-02-SC-F25S180-12-4100-C-BL6-35 | FLS-02-SC-F25S180-12-4100-C-BL6-45 | FLS-02-SC-F25S180-12-4100-C-BL6-35 | FLS-02-SC-F25S180-12-4100-C-BL6-45 |
| Light Switch | Carling | RR112BB-NN | | | |
| Base Deck Inlay, Painted | | 3412T3245-01-AB | 3412T3245-02-AB | 3412T3245-01-AB | 3412T3245-02-AB |
| Base Deck Inlay, Stainless | | 3412T3245-01-AC | 3412T3245-02-AC | 3412T3245-01-AC | 3412T3245-02-AC |
| Air Dam Glass | | 2504M0306-01 | 2504M0306-02 | 2504M0306-01 | 2504M0306-02 |
| End Panel Glass | | Contact Factory | | | |

## Caution:

**Risk of electrical shock! If cord or plug becomes damaged, it must be replaced by the manufacturer, a service agent, or similarily qualified person and only with a cord and plug of the same rating and type in order to avoid a hazard.**

# Wiring Diagram

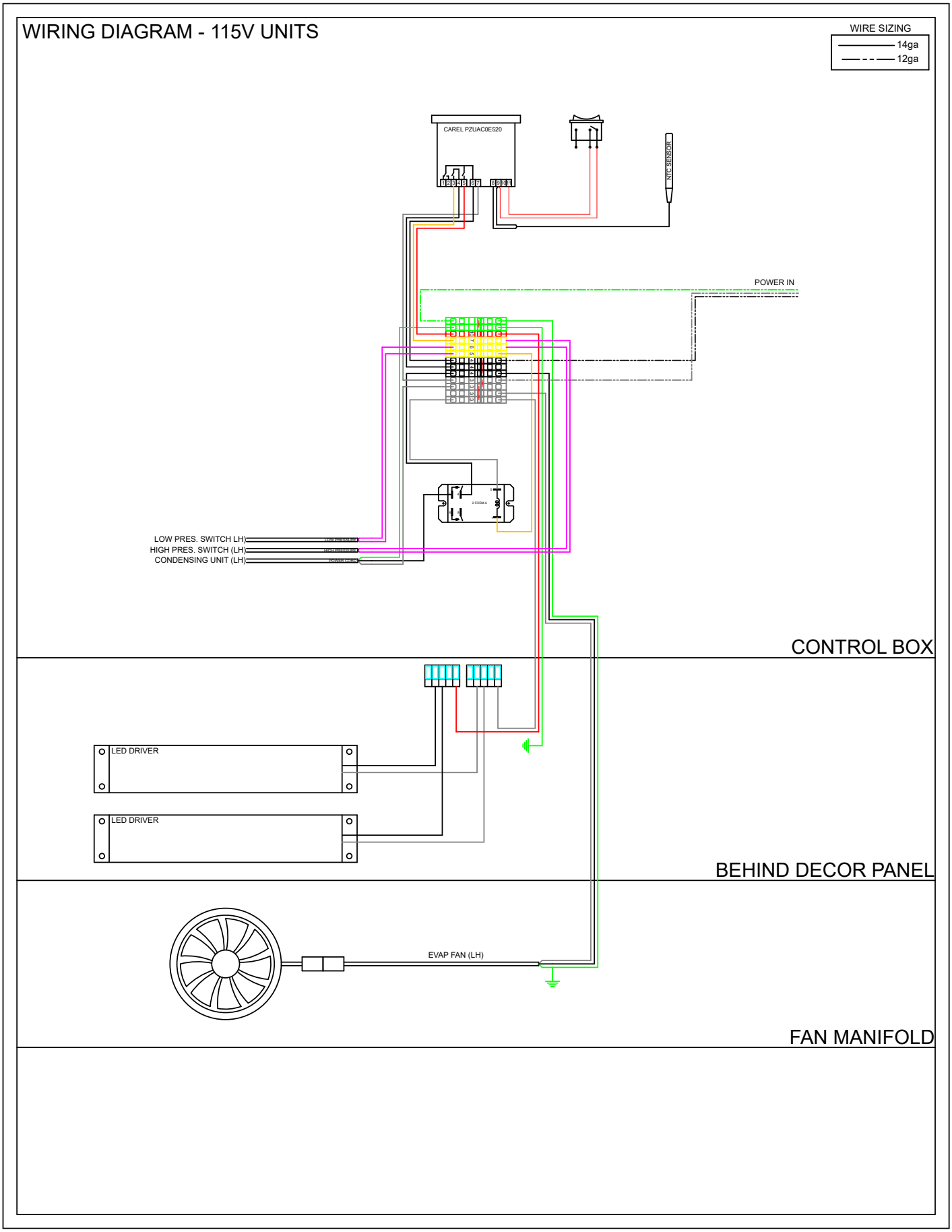

# WIRING DIAGRAM - 230V UNITS

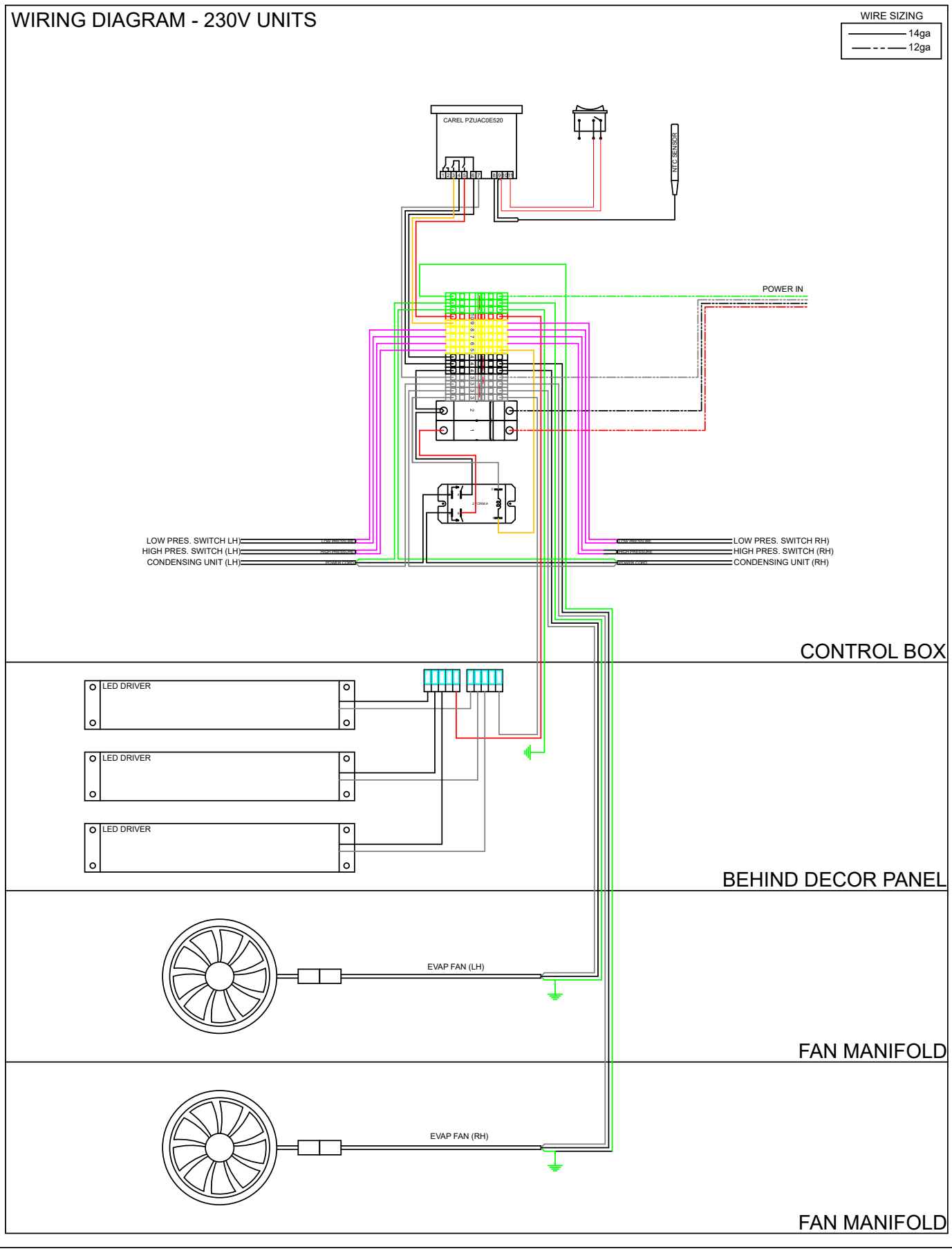

TECHNICAL SERVICE/WARRANTY CONTACT INFO:

1-800-839-5536 Ext 2920
service@cayugadisplays.com

PLEASE HAVE THE FOLLOWING INFORMATION AVAILABLE BEFORE CONTACTING CDI:

Serial # / Model # / Store # / Store Address / Details (Photos, Leak Locations, Damage, Store's Ambient Conditions, Etc)

# LIMITED WARRANTY

Cayuga Displays Inc (CDI) products are warranted to be free from defects in materials and workmanship for a period of one year from the original date of shipment from the manufacturer. CDI will pay the cost of parts and labour when the equipment is subject to normal use and maintenance as specified in the owner's manual supplied.

## Conditions of Warranty:

1. CDI will pay the cost of to repair or replace parts and assemblies that are determined to be defective within the first 12 months from the original date of shipment from the factory.
2. The labour warranty for the first 12 months is limited to standard straight labour charges and reasonable time for the repair of the defect.
3. CDI must be informed by telephone, 1-800-839-5536 Ext 2920, of the warranty issue, along with the serial number of the case, before the service work commences. A service call request to an approved service provider will then be dispatched. The service company is required to call CDI from the location before performing any warranty service work.
4. Any labour warranty obligation must be performed by a qualified refrigeration service company accepted by CDI.
5. The installation must be supervised, installed or inspected by a factory authorized service technician or the local factory representative.
6. Terms of payment must be met. If the product has not been paid within 60 days after the original date of shipment, the warranty coverage is automatically cancelled, unless otherwise agreed upon in writing by CDI.

## Exclusions from Warranty: This warranty does not cover:

1. Any part or assembly that has been altered, changed, or modified without approval.
2. Any part or assembly that has been subject to misuse, abuse, accidents or neglect.
3. Product on which the serial or model number has been altered or removed.
4. Product that has NOT been installed operated or maintained consistent with Cayuga Displays' technical publications and owner's manual.
5. Product that has been installed, operated or maintained outside the USA, Canada and Mexico, unless agreed upon in writing by Cayuga Displays head office.
6. Replacement of all tempered glass (e.g. curved front glass, side glass, shelf glass, rear sliding doors etc.) and any acrylic assemblies.
7. No claims can be made against this warranty for spoilage of product, or loss of sales.

This Warranty does not cover parts and labour expenses for component failure or damage resulting from:

1. Electrical power failure or surges to product for any reason.
2. Water damage or drainage failure for any reason.
3. Adverse operating conditions as set forth in the owner's manual disclaimer.
4. Failure to maintain the product as set forth in the owner's manual.
5. The use of high pressure or sharp cleaning equipment.

## Liability restrictions of Cayuga Displays Inc.

1. The warranties above are the only warranties made in connection with the sale and distribution of products manufactured by Cayuga Displays.
2. Any and all other expresses, statuary and implied warranties applicable to the product, including, without limitation, all implied warranties or merchantability and fitness for use are expressly disclaimed.
3. This warranty is extended to the original owner/user only and is non-transferable.

## Disclaimer

Proper placement, maintenance and operation of your product(s) are critical. If the guidelines in the manual are not followed, it is possible that your product will not function properly, and the warranty may be void.

All Cayuga Displays refrigerated cases are designed to operate in a controlled environment not exceeding 75F and 55% relative humidity.

Stores exceeding these guidelines may experience condensation on the front glass, side glass and the rear sliding doors. Minor condensation on side glass and rear sliding doors are considered normal, even under store conditions within the guidelines. Heat and moisture sources from baking, cooking or proofing equipment placed close to a refrigerated showcase will contribute to condensation on glass surfaces.

Refrigerated displays are designed to KEEP COLD PRODUCT COLD - they are not designed to bring warm product down to a cold temperature. For food safety it is always imperative that warm product be properly chilled (using a blast chiller or cold room) prior to storing in the refrigerated display case.

Self-contained cases have compressor motors and fans, and these will make noise, just as your household refrigerator makes noise. Keeping your showcase serviced and clean will help keep the noise level under control.

All Cayuga Displays showcases are ETL sanitation listed to NSF standard 7.

## Contact Information

Cayuga Displays Inc.
70 Talbot St E
Cayuga, Ontario N0A 1E0

905-772-5214
1-800-839-5536

Email: sales@cayugadisplays.com
Website http://www.cayugadisplays.com

Cayuga Displays Inc., whose policy is one of continuous improvement, reserves the right to change at anytime, these specifications, designs or prices without incurring obligation.